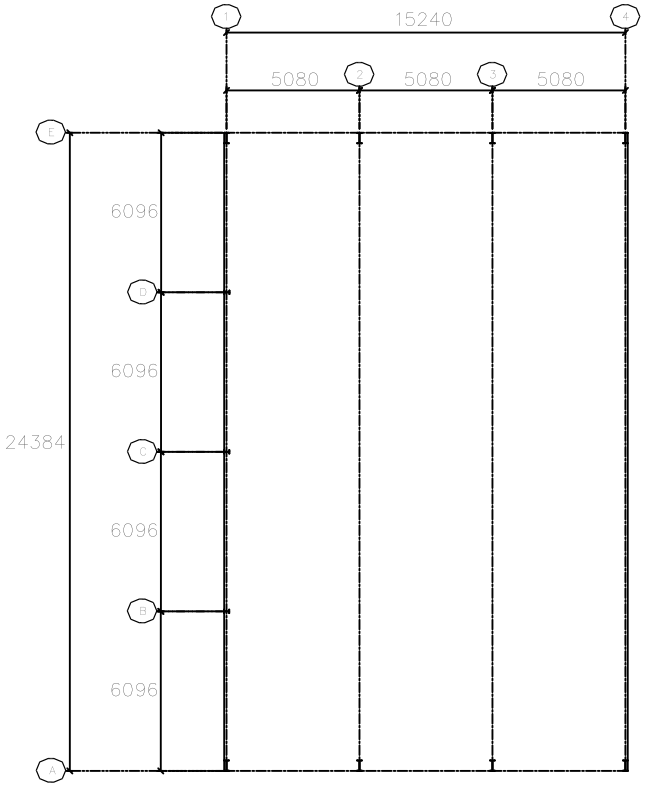


FLOOR PLAN

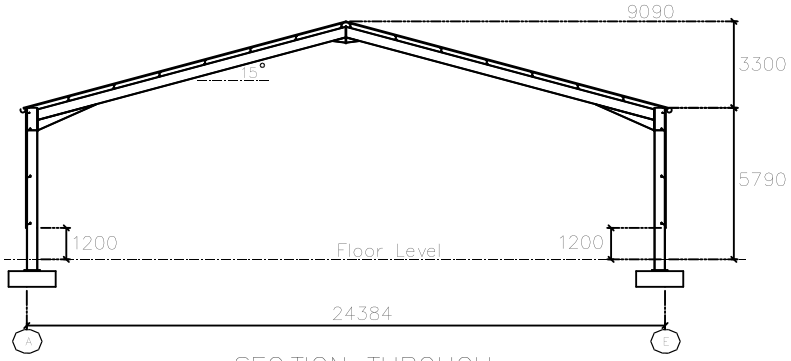


SECTION THROUGH

**Roof Cladding**

0.7mm Plastic coated steel Roof profile sheets with an Anti Condensation layer.

**Vertical Cladding**

0.5mm Plastic coated steel Wall profile sheets.

**Rainwater Goods**

170mm PVC gutter with 1no.110mm PVC pipe each side.

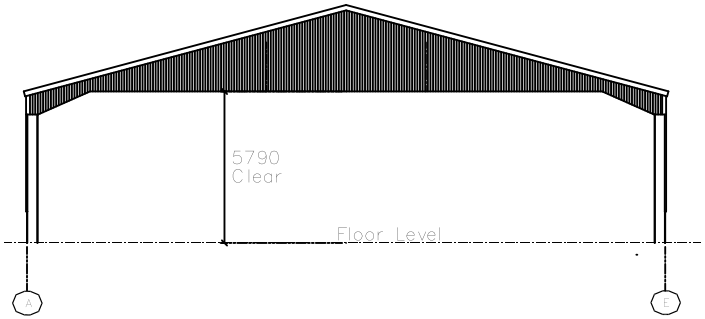


FRONT GABLE ELEVATION TO LINE 4

SOUTH FACING

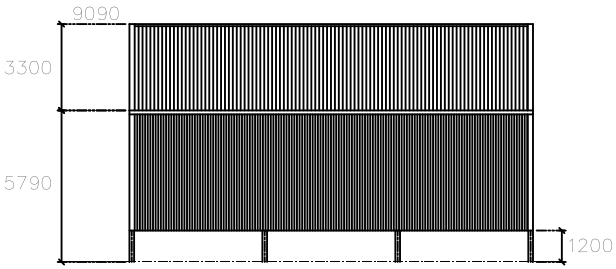


TYPICAL SIDE ELEVATION

LINES A & E

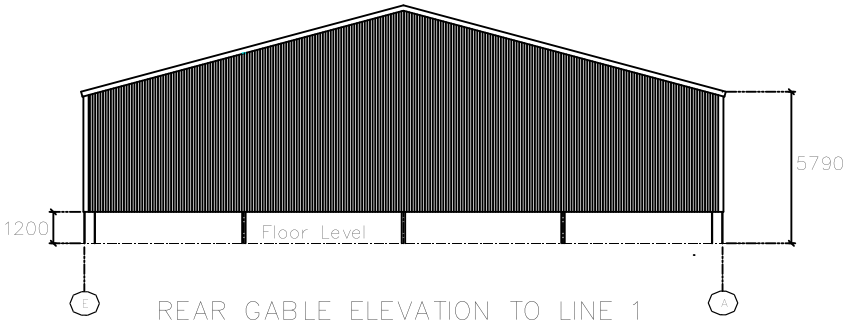


REAR GABLE ELEVATION TO LINE 1

NORTH FACING

| REV | BY | DATE | DETAILS | REV | BY | DATE | DETAILS |
|---|---|---|---|---|---|---|---|
| | | | | | | | |

GENERAL NOTES:

CLIENT
J.P. and S.Ulyatt & Son

PROJECT
Open Fronted building

TITLE
Main Road,Fosdyke,PE20 2BH

DRAWN D.P. 20/01/24

B.Pope & Sons Ltd
Church Farmyard
Sempringham
Sleaford,Lincs.NG34 0LU
Tel:01529 241493
Fax:01529 241493
Email: sales@bpopeandsons.co.uk

| SCALE | JOB No | DWG No. | REV |
|---|---|---|---|
| 1:100 | PSC 694 | PSC 694/1 | |